FIBERDOCK

Compact Fiber Coupler

Manual

Article Number: FiberDock 2V0
Manual: M-011 Version 02

TOPTICA Photonics AG
Lochhamer Schlag 19
D-82166 Graefelfing/Munich
Tel.: +49 89 85837-0
Fax: +49 89 85837-200

email: info@toptica.com
http://www.toptica.com

(February 2007 Subject to changes without notice)

Dear Customer,

welcome to the TOPTICA community!

We have designed this product to be easy to use and reliable so that you can focus on your actual work. Should you anyway have questions regarding its use or need advice on how to integrate it into your setup, please do not hesitate to ask. We will provide you with quick and competent help through our service staff and product managers.

You can contact us in the following ways:

- internet: www.toptica.com. In our support section you can find a list of frequently asked questions and a service contact form
- email: service@toptica.com
- phone: +49-89-85837-0.

Please have your product-ID/serial number ready when contacting us so we can quickly retrieve all relevant information from our databases.

We are constantly refining and improving our products and therefore highly valuate feedback from our customers. We would therefore like to encourage you to let us know what you like about our products and of course also if there is something we could improve.

Best regards,

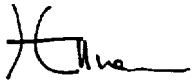

Harald Ellmann
Service Manager
TOPTICA Photonics AG

Contents

1 General **2**
1.1 Mounting Requirements 2

2 Quickstart **2**

3 Mounting and Alignment of the FiberDock **3**
3.1 Additional PM-Fiber Alignment 7

4 Appendix **8**
4.1 Specifications 8
4.2 FiberDock Main Dimensions 8
4.3 FiberDock Mounting Adaptor Main Dimensions 9

5 Guarantee and Service **10**

1 General

The TOPTICA FIBERDOCK is a compact, rugged fiber coupler designed to be easy to use, while still having all the required degrees of freedom to allow maximum coupling efficiency to be achieved. The modular design allows a large range of lenses and standard fiber types to be accommodated within a single design. The monolithic construction results in improved long term stability when compared to traditional designs. By virtually eliminating mechanical coupling (cross talk) between the various alignment axes, as well as reducing hysteresis, a more intuitive and systematic approach to adjustment is facilitated, allowing higher coupling efficiencies to be achieved in shorter periods. Once aligned, all axes can be individually locked, required minimal correction of alignment during locking.

1.1 Mounting Requirements

The FIBERDOCK can be mounted on various mounting adaptors (supplied by TOPTICA Photonics AG) or directly to your laser device. For mounting dimensions see Paragraph 4.2. The laser output beam or the mount position should be adjusted (if possible) so that the beam is centered to the mount, as well as being perpendicular to the mounting surface.

2 Quickstart

NOTE !	This quickstart guide applies only in case the FIBERDOCK is factory mounted to a TOPTICA Photonics laser system and the fiber is supplied with. The use of a power meter is recommended for proper alignment.

1. Remove the screws (1) and the covers (2) (see Figure 2).

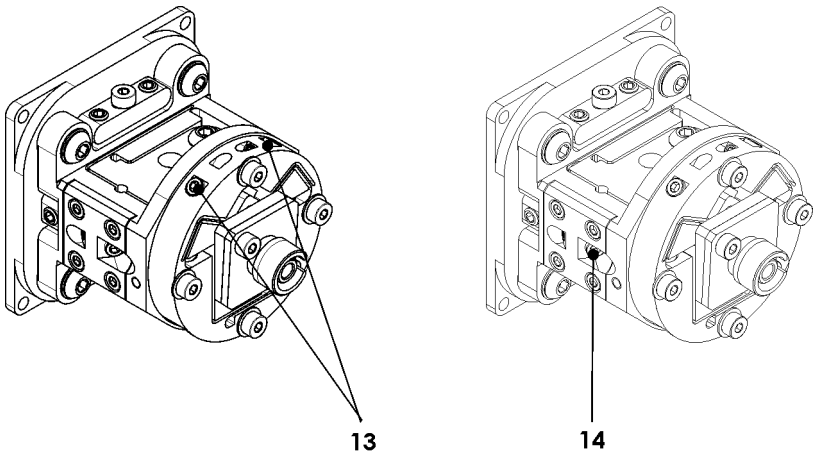

Figure 1 FIBERDOCK Quickstart Alignment

2. Connect the fiber to the FIBERDOCK and to the power meter.
Switch ON the laser.

2.1. Using the X- and Y- fiber alignment screws (13), adjust the fiber position until the power meter reading is maximized.

2.2 Turn the lens focus adjustment screw (14) until the power meter reading is maximized.

2.3 Repeat steps 2.1 and 2.2 iteratively until the desired output power is reached

3. Fix the FIBERDOCK covers (see Figure 2).

3 Mounting and Alignment of the FIBERDOCK

For proper mounting and alignment of the FIBERDOCK to your laser device please follow the procedure below.

DANGER !	For certain mounting and aligning steps it may be necessary to switch on the laser device. Do not look into any exiting beam of your laser device under conditions which exceed the limits specified by the United States Food and Drug Administration, Department of Health and Human Services, Center for Devices and Radiological Health, 21 CFR 1040.10 and 2 CFR 1040.11. Take precautions to eliminate exposure to a direct or reflected beam. Always wear laser safety goggles.

CAUTION !	Alignment must be performed at low laser powers in order to prevent the fiber from being damaged.

CAUTION !	Check whether your laser device requires an optical isolator in order to prevent the laser from being disturbed by back reflections.

1. Check the X- and Y- position of the exiting beam of the laser device at a distance of approx. 8 cm in front of the FIBERDOCK mounting plane. It is recommended to mark the position of the beam spot on a sheet of paper or an IR-card for later reference.

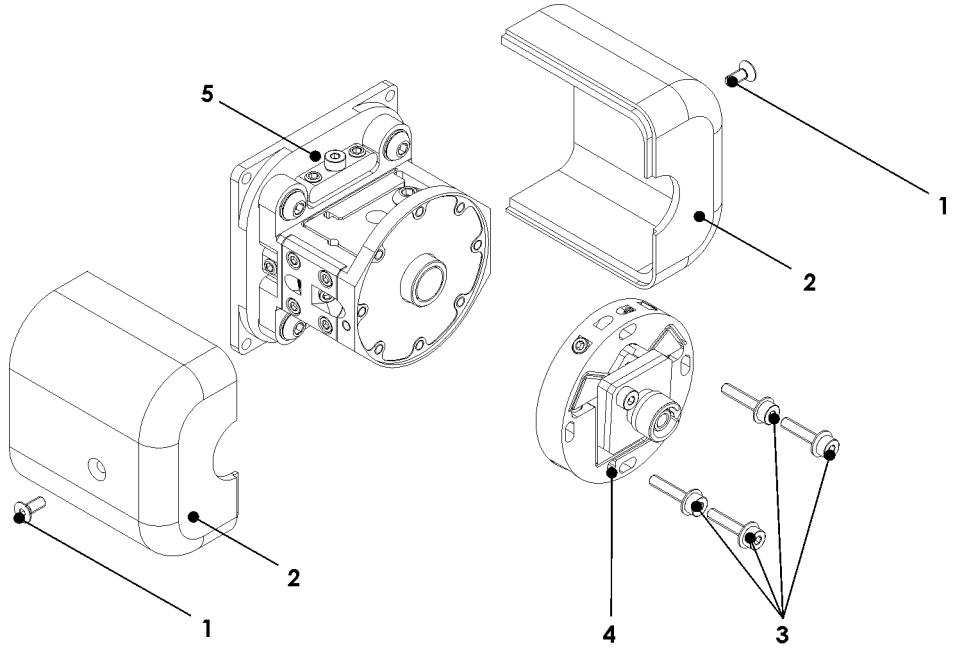

Figure 2 Removing the Covers and the Fiber Manipulator Plate

2. Remove the screws (1) and the covers (2).
Remove the screws and washers (3) and the Fiber Manipulator Plate (FMP, 4) from the Lens Manipulator Assembly (LMA, 5) as shown in Figure 2.

3. If a mounting adaptor has been supplied with your FIBERDOCK, fix it to the laser device (see detailed description of the mounting adaptor).
Mount the LMA (5) on the adaptor using 4 screws M 2 of appropriate length so that all adjustment screws are accessible, especially the lens focus adjustment (see items (15, 16) in Figure 5).

NOTE !	If the FIBERDOCK is to be mounted directly to the laser device please use 4 screws M 2 of appropriate length. For mounting dimensions please refer to Figure 7.

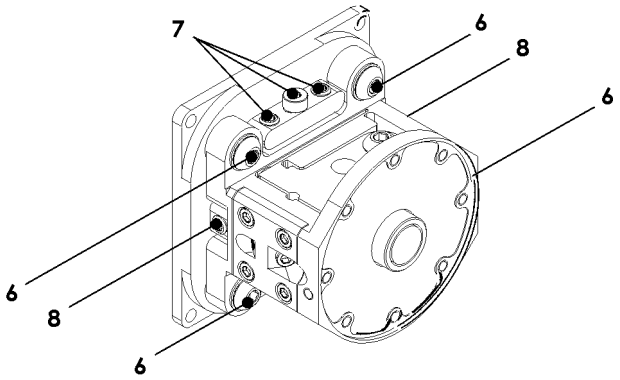

Figure 3 Centering the Lens

4. Switch ON the laser and check the X- and Y- position of the laser beam passing the LMA and compare with the beam position found in step 1.
To align the lens loosen the four lens mounting screws (6) 1/8 turn and center the lens to the beam by using the lens alignment screws (7, 8) until the spot of the laser beam has the same position as found in step 1.

NOTE !	The center screw of the alignment screw set (7) has a pulling function. All other alignment screws (7, 8) have pushing functions. Take care that the alignment screws are not too tight during adjustment so that the lens holder can be shifted smoothly.

5. Switch OFF the laser.

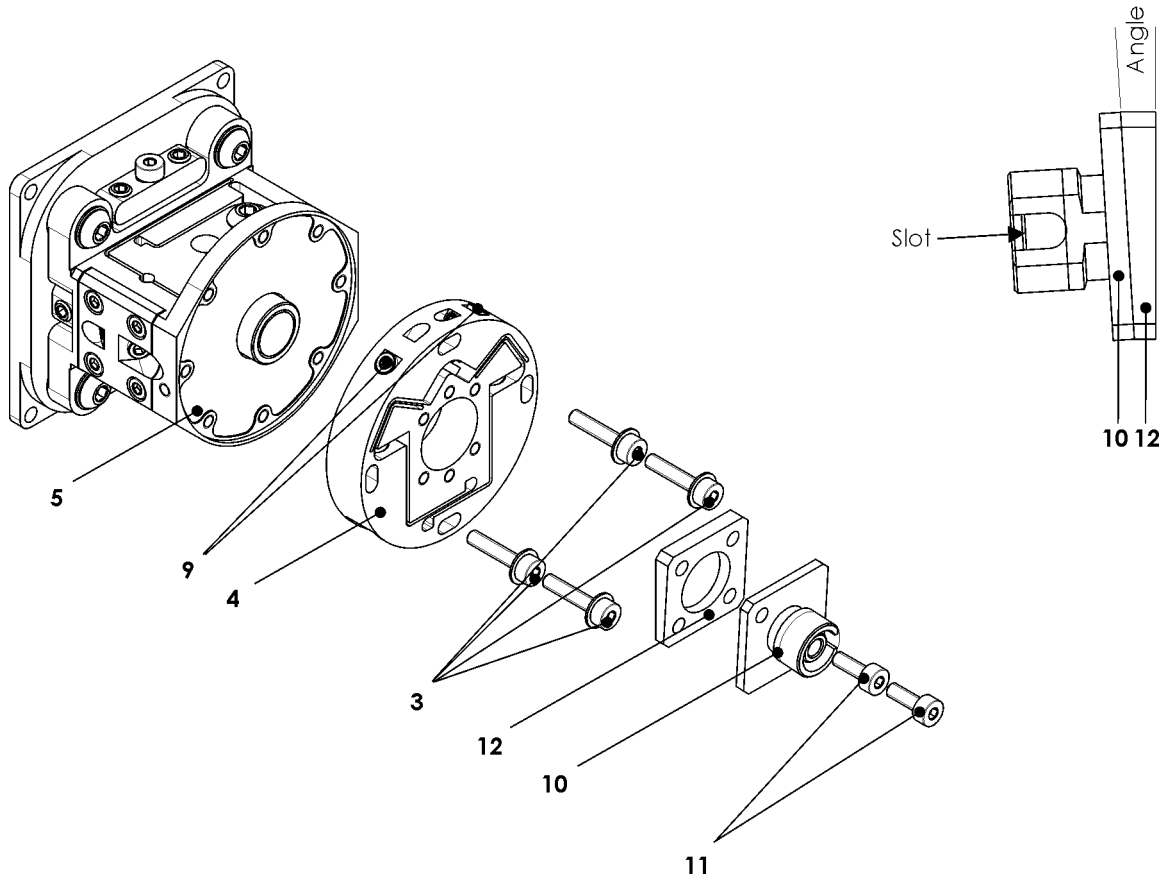

Figure 4 Mounting the Fiber Manipulator Plate

5. Fix the FMP (4) to the LMA (5) with the four screws and washers (3) so that the fiber alignment screws (9) are accessible.

NOTE !	**Fiber Adaptor (10) and Angle Plate (12) always have to be mounted as a sub-assembly in the orientation shown in Figure 4.** **For PM-fibers:** The slot of the fiber adaptor (10) has to be orientated to the polarization plane. Unscrew screws (11) in order to remove and rotate fiber adaptor (10) together with angle plate (12) if necessary. Fix with screws (11). **For PC-fibers:** Rotate fiber adaptor (10) depending on the laser polarization. The spacer plate (only on request) is manufactured for use with standard PC-fibers. **For APC-fibers:** Rotate fiber adaptor (10) together with angle plate (12) depending on the laser polarization and the fiber angle orientation. The supplied angle plate is manufactured for use with standard APC-fibers.

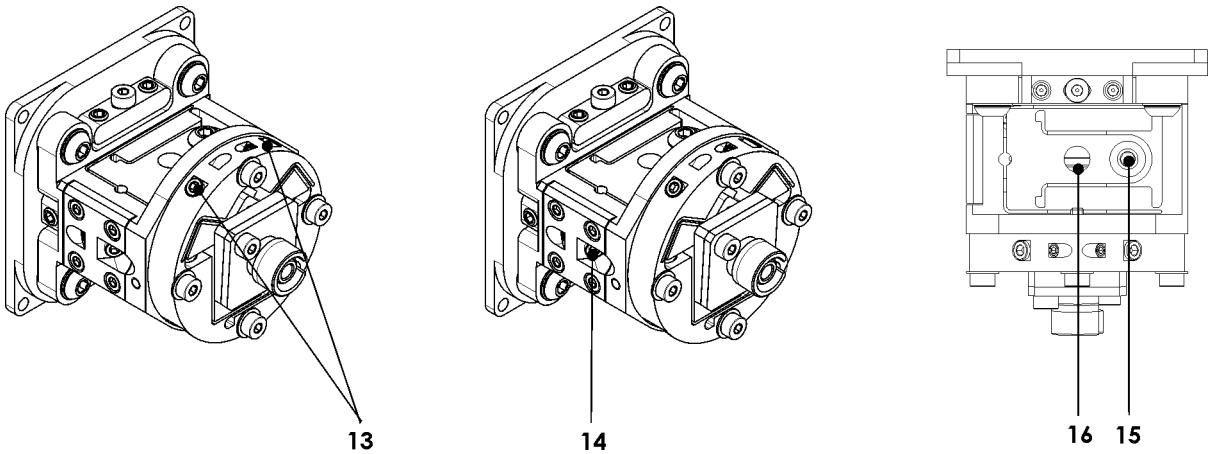

Figure 5 Alignment of the FIBERDOCK

6. Alignment of a SM-fiber as an example for the general FMP alignment:

The use of a power meter is recommended for proper alignment. Connect the fiber to the FIBER-DOCK and to the power meter.
Switch ON the laser.

6.1. Using the X- and Y- fiber alignment screws (13), adjust the fiber position until the power meter reading is maximized.

6.2 Turn the lens focus adjustment screw (14) until the power meter reading is maximized.

6.3 Repeat steps 6.1 and 6.2 iteratively until the desired output power is reached.

NOTE !	In case the desired output power is not reached and the lens focus adjustment has reached one end stop please proceed as follows: Set the lens focus adjustment back to center position and release the lens clamping screw (15). Shift lens mount by means of the slot (16) approx. 0.5 mm in the desired direction and fix lens clamping screw (15) again. Repeat from step 6.1.

7. Should the output power still is not be sufficient the lens centering can be fine tuned to achieve maximum power as described in step 4 but without removing the FMP and only by observing the power meter.

NOTE !	This procedure is absolute necessary with small laser beam diameters (< 2 mm $1/e^2$).

8. Fasten the four lens mounting screws (items (6) in Figure 3.

8. Fix the FIBERDOCK covers (see Figure 2).

3.1 Additional PM-Fiber Alignment

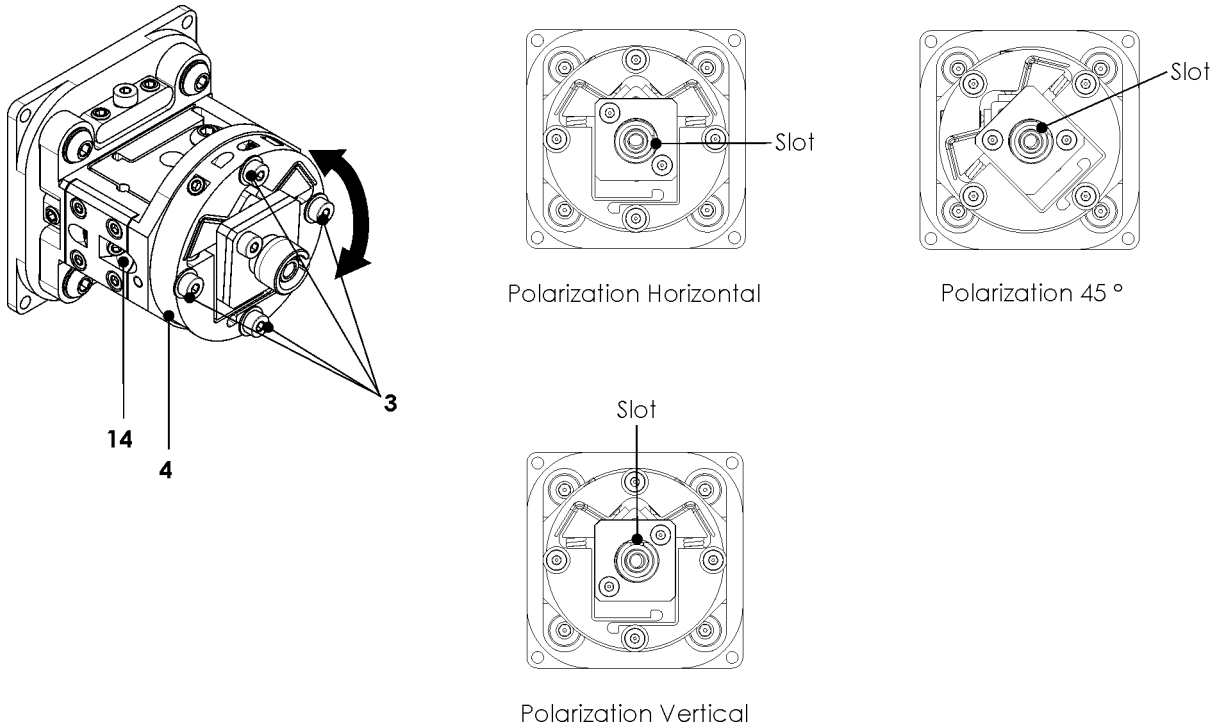

Figure 6 Polarization Alignment

Basic polarization alignment is performed as shown in Figure 6.

NOTE !	Fiber Adaptor (10) and Angle Plate (12) always have to be mounted as a sub-assembly in the orientation shown in Figure 4.

For fine polarization alignment defocus the laser beam by turning the focus adjustment screw (14) to increase the spot size at the fiber. After loosening the four screws (3) he FMP (4) can be rotated by ± 4° and has to be adjusted by an appropriate measuring method.

After the polarization alignment please repeat from alignment step 6 in Paragraph 3 to ensure that maximum coupling efficiency is again reached.

4 Appendix

4.1 Specifications

Fiber Type	MM, SM, PM
Connector	APC, PC
Lens Focal Length	up to 30 mm
Wavelength Range	350 nm to 2000 nm
Size (BxHxL)	40 mm x 40 mm x 41 mm
Coupling Efficiency	up to 85 % in a SM Fiber, up to 90 % in a MM Fiber
Beam Diameter	up to 6 mm

4.2 FIBERDOCK Main Dimensions

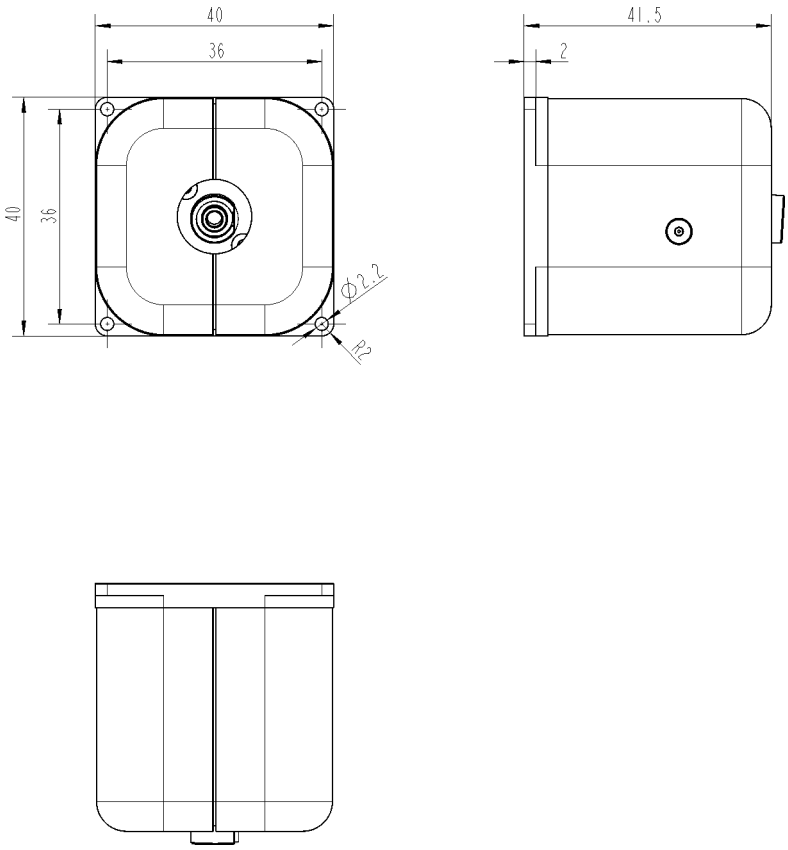

Figure 7 FIBERDOCK Main Dimensions

4.3 FIBERDOCK Mounting Adaptor Main Dimensions

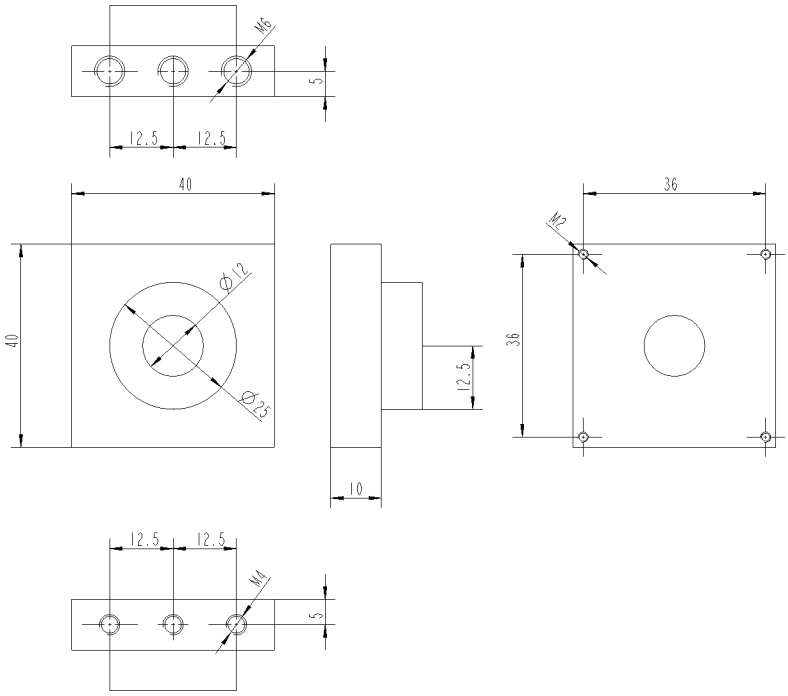

Figure 8 FIBERDOCK Mounting Adaptor Main Dimensions

5 Guarantee and Service

To obtain information concerning factory service, contact your local distributor or TOPTICA Photonics AG directly. On the following pages you find the Guarantee Registration Form and the Service and Technical Support Form.

Please fill in the **Guarantee Registration Form** immediately after you have received your device and return it to TOPTICA Photonics AG by mail or fax.

In case your device has to be returned to TOPTICA Photonics AG for service or technical support first call TOPTICA Photonics AG for a **Return Authorization Number** which you should use as a reference in your shipping documents and mark clearly on the outside of the shipping container. Then fill in the **Service and Technical Support Form** and return it to TOPTICA Photonics AG together with the device. Please specify the problems with the device as detailed as possible.

Guarantee Registration Form			
QM form: F-015	**Status of form:** 22.02.05	**Version of form:** 01	**Page:** 1 of 1

return to

TOPTICA Photonics AG
Customer Service
Lochhamer Schlag 19
D- 82166 Graefelfing/Munich
Germany

FAX: +49 89 85837-200

sender:

_____
_____
_____
_____
_____

Guarantee Conditions

The products of TOPTICA Photonics AG are produced with the greatest possible care using high-quality components and are checked in detail before being delivered. Therefore, as the manufacturer, TOPTICA Photonics AG gives a guarantee of durability according to the following terms:

1. **TOPTICA Photonics AG guarantees the buyer that there will be no defects in the product based on defective material or processing, for a period of 12 months from first delivery (guarantee period).** Natural wear and tear as well as defects resulting from improper use or use contrary to the specifications, from failure to observe operating instructions, from insufficient maintenance and care or from modifications, interventions or attempted repairs that are neither carried out nor authorized by TOPTICA Photonics AG, are not covered by the guarantee.
2. **Unless expressively stated in the order acknowledgement or the invoice semiconductor light emitting devices like laser diodes, tapered amplifier chips etc. whether sold as single parts or integrated in systems are not covered by the guarantee.**
3. If a defect covered by the guarantee arises during the guarantee period, TOPTICA Photonics AG shall rectify such defect within a reasonable period at its own discretion by repairing or replacing the product or the defective part.
4. The guarantee period shall commence upon delivery of the product by TOPTICA Photonics AG or by a third party that obtained the product directly from TOPTICA Photonics AG for the purpose of selling it to the buyer.
   The claim under the guarantee shall be excluded if the defect is not notified to TOPTICA Photonics AG in writing immediately after having been discovered, and no later than one month after expiry of the guarantee period.
   For the purpose of rectifying a defect covered by the guarantee, the product or the relevant part shall be sent to TOPTICA Photonics AG at the expense and risk of the buyer. The product shall be returned at the expense and risk of TOPTICA Photonics AG.
5. No claims may be derived from this guarantee other than claims for rectification of the defects falling within the scope hereof, in accordance with the present terms. In particular, the buyer is not entitled under this guarantee to claim damages or a reduction in price from TOPTICA Photonics AG, or to rescind the contract. Potential, more far-reaching claims of the buyer against its seller shall not be affected by this guarantee.
6. **Important!: The obligation of TOPTICA Photonics AG under this guarantee is subject to the condition that the buyer gives his/her express consent to them by sending the signed duplicate of this form to TOPTICA Photonics AG immediately after delivery, also truthfully indicating the model number, the serial number and the date on which the product was delivered.**
7. The buyer may not assign claims under this guarantee to third parties without the prior written consent of TOPTICA Photonics AG.
8. This guarantee is governed by substantive German law to the exclusion of the provisions of the UN-Convention on Contracts for the International Sale of Goods (CISG). The Regional Court [Landgericht] Munich I shall be the court of exclusive international, local and subject-matter jurisdiction for legal disputes arising under or in connection with this guarantee.

I request the above mentioned guarantee for the purchased products and herewith consent to the above mentioned Guarantee Conditions:

Model No.: _____ Date: _____

Serial No.: _____ Signature: _____

Date of Delivery: _____ Name/Title: _____

To be completed by the buyer and returned to TOPTICA Photonics AG by mail or fax (+49 - 89 – 85837 – 200).

Service and Technical Support Form

QM form: F-008	Status of form 22.7.05	Version : 01	Page: 1 of 1

Return to:

TOPTICA Photonics AG
Customer Service
Lochhamer Schlag 19
D- 82166 Graefelfing/Muenchen
Germany

FAX: +49 - 89 - 85837 -200

Sender:

_____
_____
_____
_____
_____

Return Authorization number: RMA - VB. _ _. _ _ _ _
Before goods are returned, please ask the
TOPTICA Customer Service for a RMA- number.

Products (model/ID numbers): _____ S/N: _____
(Located on the back panel of the device) _____ S/N: _____
_____ S/N: _____

Please give us a detailed description of your problems, e.g what the symptoms are and under which circumstances they occur:

_____
_____
_____
_____
_____ _____

Additional information (e.g. modifications, additional equipment etc.)

_____
_____

Mains voltage:_____ V _____ Hz. Did you notice irregularities (spikes etc.)? _____

To be completed by the customer and returned to TOPTICA Photonics AG by mail or fax (+49 –(0) 89 - 85837 - 200).